Inductive - *analog+* Sensors

Housing Style	Part Number	ID Number	Linear Operating Distance (mm)	Response Freq. (Hz)	Output
40 mm - Embeddable and Non-embeddable, *eurofast*® Quick Disconnect 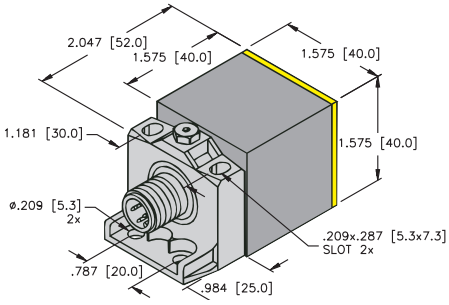	Bi15-CK40-LIU-H1141	M1537890	4-11	110	**4-Wire DC Current and Voltage**
	Ni25-CK40-LIU-H1141	M1537891	5-25	30	
	Ni25-CK40-LIU2-H1141	M1537892	5-25	30	**4-Wire DC Current and Voltage**
40 mm - Embeddable and Nonembeddable, Terminal Chamber 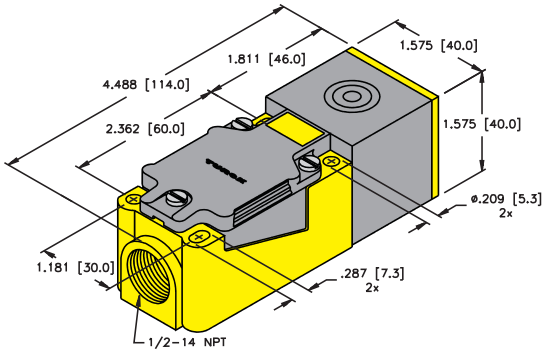	Bi15-CP40-LIU	M1535700	4-11	110	**4-Wire DC Current and Voltage**
	Ni25-CP40-LIU	M1535547	5-25	30	
80 mm - Nonembeddable, *eurofast* Connector 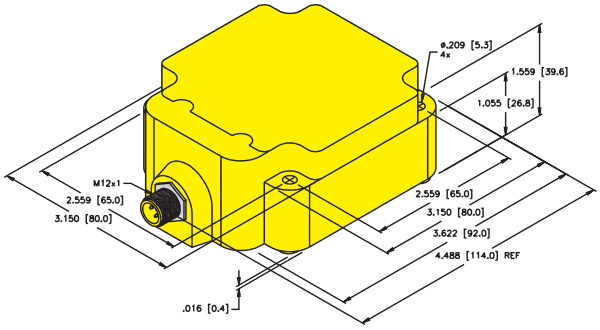	Ni50-Q80-LIU-H1141	M1535545	10-50	30	**4-Wire DC Current and Voltage**

For detailed sensor specifications see Section M.

TURCK mold-on connectors available on all cable sensors. See page M25.

Voltage	Output Voltage/Current	Operating Temp. (°C)	Protection	Slew Rate V/ms, mA/ms	Housing	Face	Mating Cord, Cable Length/Mat.	Wiring Diagram #
15-30 VDC	0-10 V/0-20 mA	-10 to +70	IP 67	2.2, 4.4	PBT	PBT	RK 4.4T-*	1
	0-10 V/0-20 mA	-10 to +70	IP 67	0.6, 1.2	PBT	PBT	RK 4.4T-*	1
15-30 VDC	2-10 V/4-20 mA	-10 to +70	IP 67	0.6, 0.96	PBT	PA 66	RK 4.4T-*	1
15-30 VDC	0-10 V/0-20 mA	-10 to +70	IP 67	2.2, 4.4	PBT	PBT	- - - -	2
	0-10 V/0-20 mA	-10 to +70	IP 67	0.6, 1.2	PBT	PBT	- - - -	2
15-30 VDC	0-10 V/0-20 mA	-10 to +70	IP 67	0.6, 1.2	PBT	PBT	RK 4.4T-*	1

Wiring Diagrams

Diagram 1

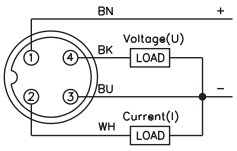

Diagram 2

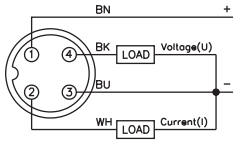

* Length in meters.

For material descriptions see page M36.